OCS Report
MMS 99-0044

Three-Dimensional Coastline Projection Computational Techniques for Determining the Locations of Offshore Boundaries

U.S. Department of the Interior
Minerals Management Service
Mapping and Boundary Branch

OCS Report
MMS 99-0044

Three-Dimensional Coastline Projection Computational Techniques for Determining the Locations of Offshore Boundaries

By

William E. Ball Jr., Ret.
USDOI, Bureau of Land Management, NARSC,
Denver Federal Center, Denver, Colorado

Prepared By

Albert J. Doughty, MMS
USDOI, Minerals Management Service, MBB,
Denver Federal Center, Denver, Colorado

MMS
U.S. Department of the Interior
Minerals Management Service
Mapping and Boundary Branch

1999

Contents

Abstract, 1
Introduction, 1
Definitions, 1
Computing the Locations of Offshore Boundary Lines, 4
Projecting the Baseline Seaward, 5
The Scanning Process, 11
Points of Intersection of Adjacent Arc and Tan Segments, 15
Legal Description of an Offshore Boundary Line, 20
Summary, 25
References, 26
Notation, 27

Figures

Figure 1. Baseline and projected offshore boundary line, 2
Figure 2. Baseline projected seaward *n* nautical miles along an arc over the ellipsoidal surface, 3
Figure 3. Offshore arc segment AB projected seaward. The baseline center of arc is point P, 6
Figure 4. Plane perpendicular to the ellipsoidal surface that contains baseline straight line segment $\overline{P_1P_2}$, 7
Figure 5. Baseline tangent (Tan) segment $\overline{P_1P_2}$ in plane PL_1 projected seaward to form offshore tangent segment $\overline{P'_1P'_2}$ in plane PL_2, 9
Figure 6. Baseline straight line segment end points P_1 and P_2 projected *nmc* nautical miles seaward to produce an offshore boundary straight line segment and points P_1' and P_2', 10
Figure 7. X_s scanning planes for detecting the most seaward projected curved line segments or straight line segments, 11
Figure 8. Sphere 1 - Sphere 2 - Ellipsoid point of intersection, 15
Figure 9. Plane 1 - Plane 2 - Ellipsoid point of intersection, 17
Figure 10. Plane - Sphere - Ellipsoid point of intersection, 18
Figure 11. Legal description of baseline, 21
Figure 12. Legal description of a projected offshore boundary line, 22
Figure 13. Offshore boundary line within an Outer Continental Shelf (OCS) block grid system, 24

Abstract

Accurate locations of the offshore boundaries of the United States are needed by the U.S. Department of the Interior Minerals Management Service (MMS) for minerals management purposes on the Outer Continental Shelf (OCS).

Offshore boundary lines are (1) boundary lines that are located by projecting a coastline seaward and more or less parallel to itself or (2) they consist of equidistant lines that are located at the midpoints between two coastlines.

A projected offshore boundary line consists of an unbroken series of intersecting curved line segments and "straight" line segments, every point of which is located a given distance from the closest point on the coast line as measured along an arc over the earth's ellipsoidal surface.

Three-dimensional geodetic computational techniques and mathematical equations are presented. These techniques and equations have been developed for computing the locations of and for preparing complete and accurate descriptions of the projected offshore boundaries of the United States for minerals management purposes.

Introduction

The following is a description of the three-dimensional coastline projection computational techniques that have been developed for determining the locations of 200-nautical mile Exclusive Economic Zone (EEZ) boundaries. The same techniques can also be employed to determine the locations of boundaries at other distances offshore by substituting the desired projection distance.

Definitions

Figure 1 illustrates definitions of terms that are used in describing the boundary computational processes.

Baseline - The normal baseline is the line of mean low water, or mean lower low water where applicable, along that portion of the seacoast that is in direct contact with the open sea. Baselines also include closing lines across the mouths of rivers and bays.

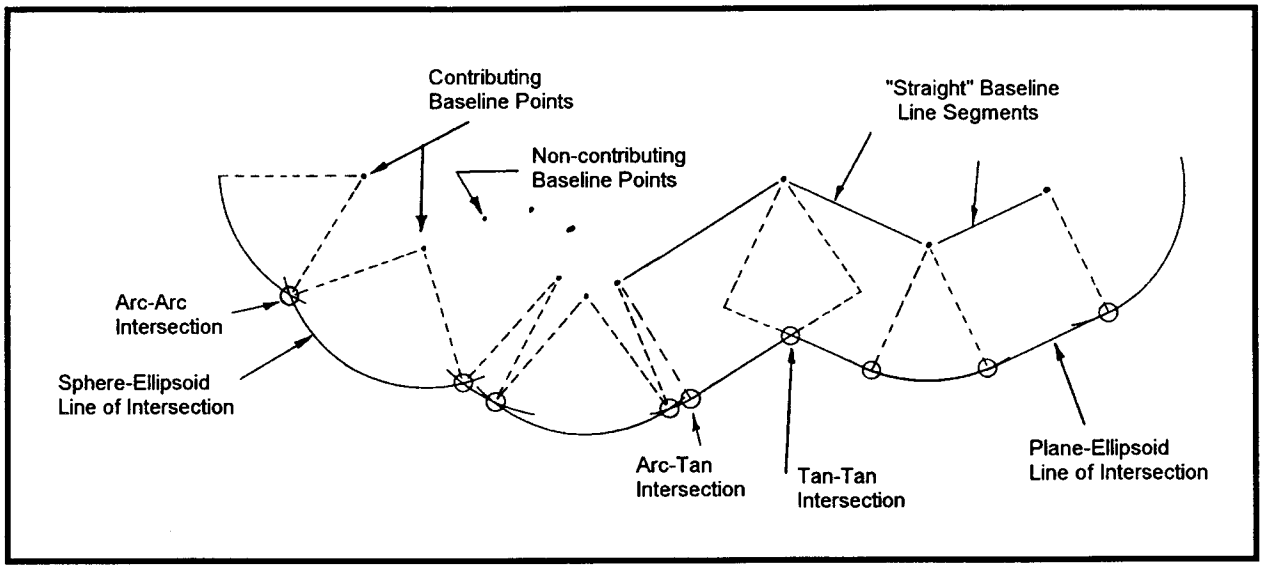

Figure 1. Baseline and projected offshore boundary line.

For computational purposes, a baseline is a mathematical approximation of the location of the (lower) low water line. It is represented by (1) a series of points only and (2) by points connected by short straight line segments. The baseline points usually represent prominent points along irregular stretches of coastline. The straight line segments of the baseline represent smoother, straighter stretches of the coastline and closing lines.

The locations of all baseline points are defined by their geographic coordinates (i.e., latitude and longitude), which are determined by surveys or by digitizing from nautical charts or specially prepared large scale charts.

When baseline points and lines have been agreed upon by all interested parties, their coordinates are treated thereafter as though they are exact.

Arcs and Tans - Offshore boundary lines are made up of an unbroken set of intersecting curved line segments and (more or less) straight-line segments. In two-dimensional space, offshore boundary lines computed using two-dimensional computational techniques consist of intersecting curved line segments, which are arcs of circular curves (which are referred to as arc segments or arcs), and truly straight-line segments (and which are referred to as tangent segments or tans). In three-dimensional space, the lines of intersection of circular curves (or spherical arcs) with the earth's ellipsoidal surface become slightly distorted "circular" arcs, and the lines of intersection of line segments (or planes) with the ellipsoidal surface become slightly distorted "straight" line segments or tans. When these arc segments and tan segments are projected onto a planar grid for mapping purposes, the arcs and tans in most cases are neither circular nor straight (fig. 2).

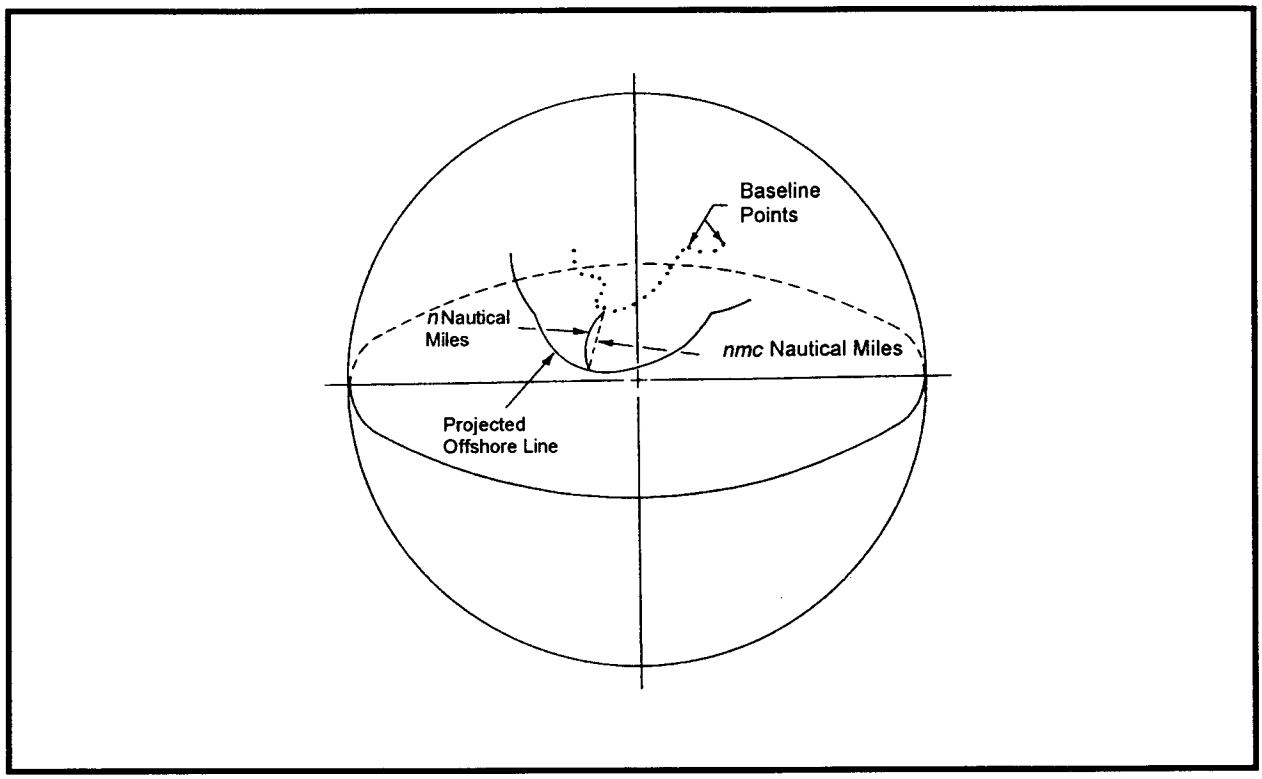

Figure 2. Baseline projected seaward *n* nautical miles along an arc over the ellipsoidal surface. An *nmc* nautical mile projection through three-dimensional space is equivalent (*nmc* = nautical mile chord).

Offshore Boundary Line - The offshore boundary line which forms a nation's *n*-nautical mile seaward boundary, is defined as a line every point of which is located *n* nautical miles from the closest point on the baseline - as measured along an arc over the earth's ellipsoidal surface.

The location of the offshore boundary line is determined by projecting the baseline more or less parallel to itself and *n* nautical miles seaward. In this way, an unbroken line is formed, which consists of intersecting "circular" (arc) segments and "straight" line (tan) segments. The resulting boundary line is the envelope of all "circular" arc segments *n* nautical miles in radius centered at all baseline points and all "straight" line tan segments projected *n* nautical miles seaward from and parallel to the straight line segments of the baseline.

Exclusive Economic Zone (EEZ) Boundary Line - The offshore boundary line, which forms the seaward boundary of a nation's Exclusive Economic Zone, is defined as a line every point of which is located 200 nautical miles (nm) from the closest point on the baseline.

Projection Distance in Nautical Mile Chords (NMC) - All offshore boundaries have been projected *n* nautical miles seaward from the baseline as measured along an arc over the earth's ellipsoidal surface. These projections are performed mathematically in some cases by creating a sphere that has a radius equal to the chord length of an *n* nautical mile arc, and in other cases by projecting a plane parallel to another plane a distance equal to the chord length of an *n* nautical mile arc. A projection distance of 200 *nmc*s, for example, is equal to the chord length of a 200- nautical mile ellipsoidal arc.

Chord distance varies with latitude and azimuth corresponding to variations in the radius of the earth's ellipsoidal surface. Therefore, the chord length must be computed separately for each stretch of coastline even though the projection distance remains unchanged.

Computing the Locations of Offshore Boundary Lines

Defining the Baseline - The baseline, defined for boundary computational purposes as a mathematical approximation of the mean (lower) low water line, is represented by a series of (1) points only and (2) points connected by straight line segments. The locations of all baseline points are obtained from best available information and are defined by their geographic coordinates.

Baseline Computational Subset - For offshore boundary computational purposes, some of the baseline points that represent the coastline and which do not influence the location of a particular *n*-nautical mile offshore boundary line are eliminated. The baseline for computational purposes is therefore represented by a subset of the fully defined baseline. All baseline points that might influence the offshore boundary line are treated as though they do influence the boundary line. A conservative computational baseline subset will usually consist of discontinuous but otherwise unaltered portions of the baseline. A subset of the baseline that is to be used for a 200-nm EEZ boundary might include only a small fraction of the baseline points needed to represent the actual coastline.

Determining The Projection Distance - For a particular offshore boundary, the arc distance from the baseline to the boundary line over the earth's ellipsoidal surface is specified. However, for mathematical projection purposes, the projection distance is sometimes equal to the chord length of the ellipsoidal arc. In those cases it must be computed. Also, because the ellipsoidal radius varies with latitude and azimuth, the chord length will vary along the coastline. For this reason, the projection chord length should be recomputed wherever it changes. For computational purposes, the baseline should be separated into sections throughout which the projection chord length will be constant.

In order to compute the chord length c_0 of an ellipsoidal arc of given length s_0, the following procedure is employed:

The relationship between ellipsoidal arc distance s and its chord length c is expressed by

$$s = c\left(1 + \frac{c^2}{24R_\theta^2} + \frac{3c^4}{640R_\theta^4} + \ldots\right). \tag{1}$$

Because c is not defined explicitly in terms of s, an iterative process is utilized in which an initial estimate c' of the chord length is used to obtain a corresponding initial value s' of the arc length using equation 1. A correction $\Delta c'$ to the estimated length c' is then computed from

$$\Delta c' = \frac{s_0 - s'}{1 + \frac{c'^2}{8R_\theta^2} + \frac{15c'^4}{640R_\theta^4}}, \tag{2}$$

and an improved estimate c'' is obtained from

$$c'' = c' + \Delta c' . \tag{3}$$

This sequence of operations is repeated until $\Delta c'$, the change in c', becomes very small. At that time, the computed value of c is accepted as the chord length c_0 that corresponds to the given arc length, s_0.

Projecting the Baseline Seaward

The offshore boundary line is the envelope of the lines of intersection with the earth's ellipsoidal surface of all arc segments *nmc* nautical miles in radius centered at all baseline points plus all tan segments projected *nmc* nautical miles seaward from and parallel to the straight-line segments of the baseline.

Arc Segments - Each arc segment is actually the line of intersection with the earth's ellipsoidal surface of a small sphere *nmc* nautical miles in radius centered at a baseline point (fig. 3). The equation of such a sphere with a radius, R_0, equal to the chord length of the ellipsoidal arc distance centered at baseline point $P_0(x_0, y_0, z_0)$ will be

$$(x-x_0)^2 + (y-y_0)^2 + (z-z_0)^2 = R_0^2 \tag{4}$$

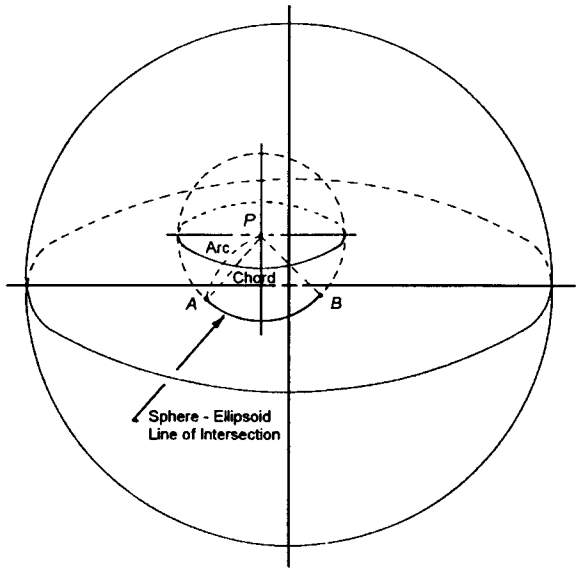

Figure 3. Offshore arc segment AB projected seaward. The baseline center of arc is point P.

in terms of geocentric coordinates, and the equation of the line of intersection will be

$$z^2\left(1 - \frac{a^2}{b^2}\right) - 2xx_0 - 2yy_0 - 2zz_0 - R_0^2 + a^2 + x_0^2 + y_0^2 + z_0^2 = 0. \qquad (5)$$

Tan Segments - Each tan segment is the line of intersection with the earth's ellipsoidal surface of a plane that has been projected *nmc* nautical miles seaward from and parallel to the mean normal plane that contains a baseline straight line segment (fig.4). If a baseline straight line segment has endpoints $P_1(x_1, y_1, z_1)$ and $P_2(x_2, y_2, z_2)$, the equation of the mean normal plane PL1 that contains the baseline segment will be

$$ex + fy + gz = h_1, \qquad (6)$$

where

$$e = y_2(z_1 - z_t) - y_1(z_2 - z_t), \qquad (7)$$

$$f = x_1(z_2 - z_t) - x_2(z_1 - z_t), \qquad (8)$$

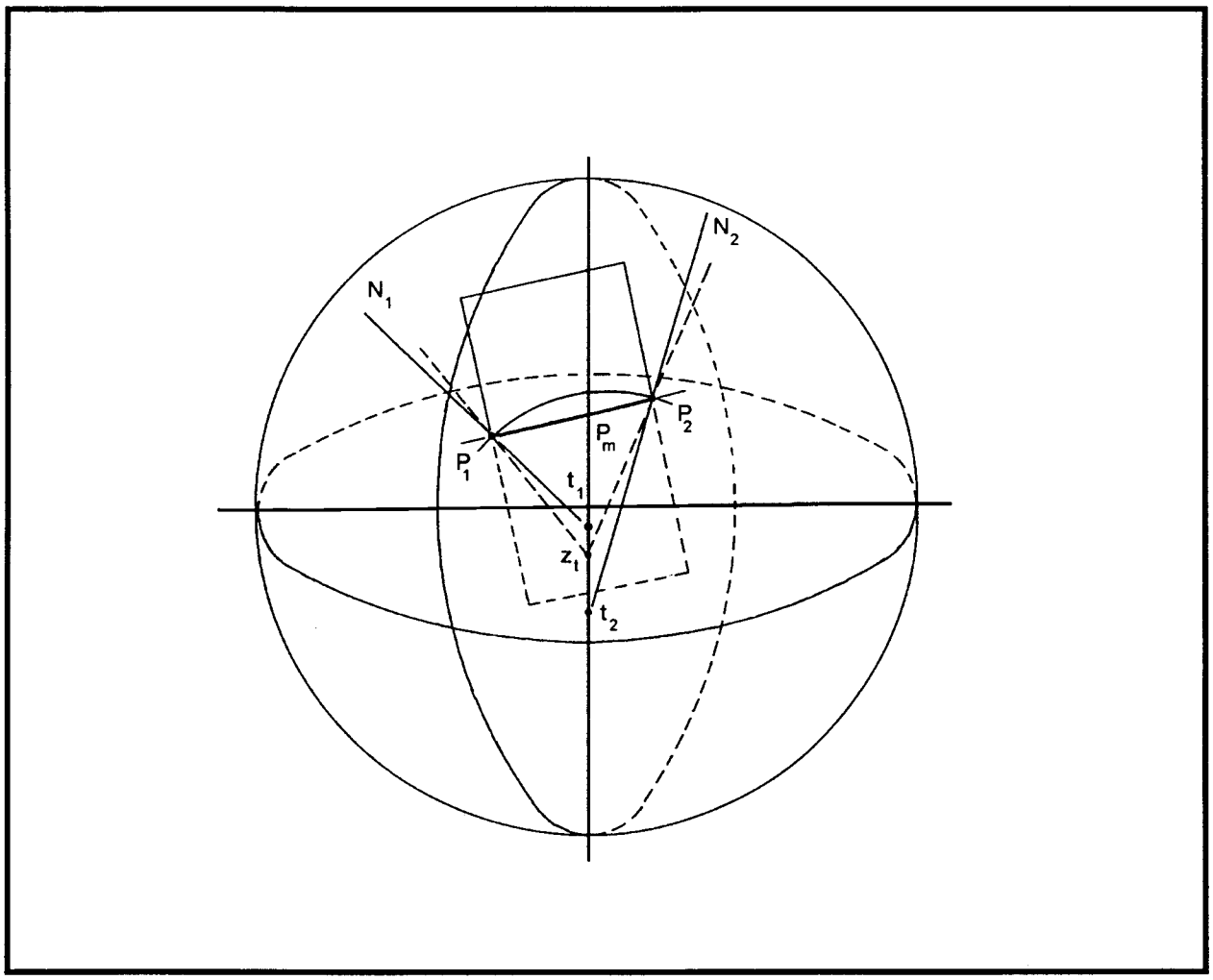

Figure 4. Plane perpendicular to the ellipsoidal surface that contains baseline straight line segment $\overline{P_1P_2}$.

$$g = x_2y_1 - x_1y_2, \tag{9}$$

$$h_1 = (x_1y_2 - x_2y_1)z_t, \tag{10}$$

and

$$z_t = \frac{\left[(x_2 - x_1)(x_2 + x_1) + (y_2 - y_1)(y_2 + y_1) + (z_2 - z_1)(z_2 + z_1)\right]}{2(z_2 - z_1)}. \tag{11}$$

If the straight line segment of the baseline is projected parallel to itself a distance of *nmc* nautical miles (i.e., the chord length of the ellipsoidal arc distance) from and perpendicular to plane PL1, the geocentric coordinates of projected endpoint $P_1'(x_1', y_1', z_1')$ can be obtained from

$$Jz_1^4 + Kz_1^3 + Lz_1^2 + Mz_1 + N = 0, \tag{12}$$

and

$$y_1 = Pz_1^2 + Qz_1 + T, \tag{13}$$

where

$$x_1 = \frac{(1 - fy_1 - gz_1)}{e}, \tag{14}$$

$$S = 2\left(y_1 - \frac{fx_1}{e}\right), \tag{15}$$

$$P = \frac{\left(1 - \frac{a^2}{b^2}\right)}{S}, \tag{16}$$

$$Q = 2\frac{\left(\frac{gx_1}{e} - z_1\right)}{S}, \tag{17}$$

$$R = f^2 + e^2, \tag{18}$$

$$T = \frac{\left(x_1^2 + y_1^2 + z_1^2 + a^2 - R^2 - \frac{2x_1}{e}\right)}{S}, \tag{19}$$

$$J = P^2R, \tag{20}$$

$$K = 2P(QR + fg), \tag{21}$$

$$L = R(2PT + Q^2) + g^2 + \frac{a^2e^2}{b^2} + 2f(gQ - P), \tag{22}$$

$$M = 2[Q(TR - f) + g(fT - 1)], \tag{23}$$

and

$$N = T(TR - 2f) - a^2e^2 + 1. \tag{24}$$

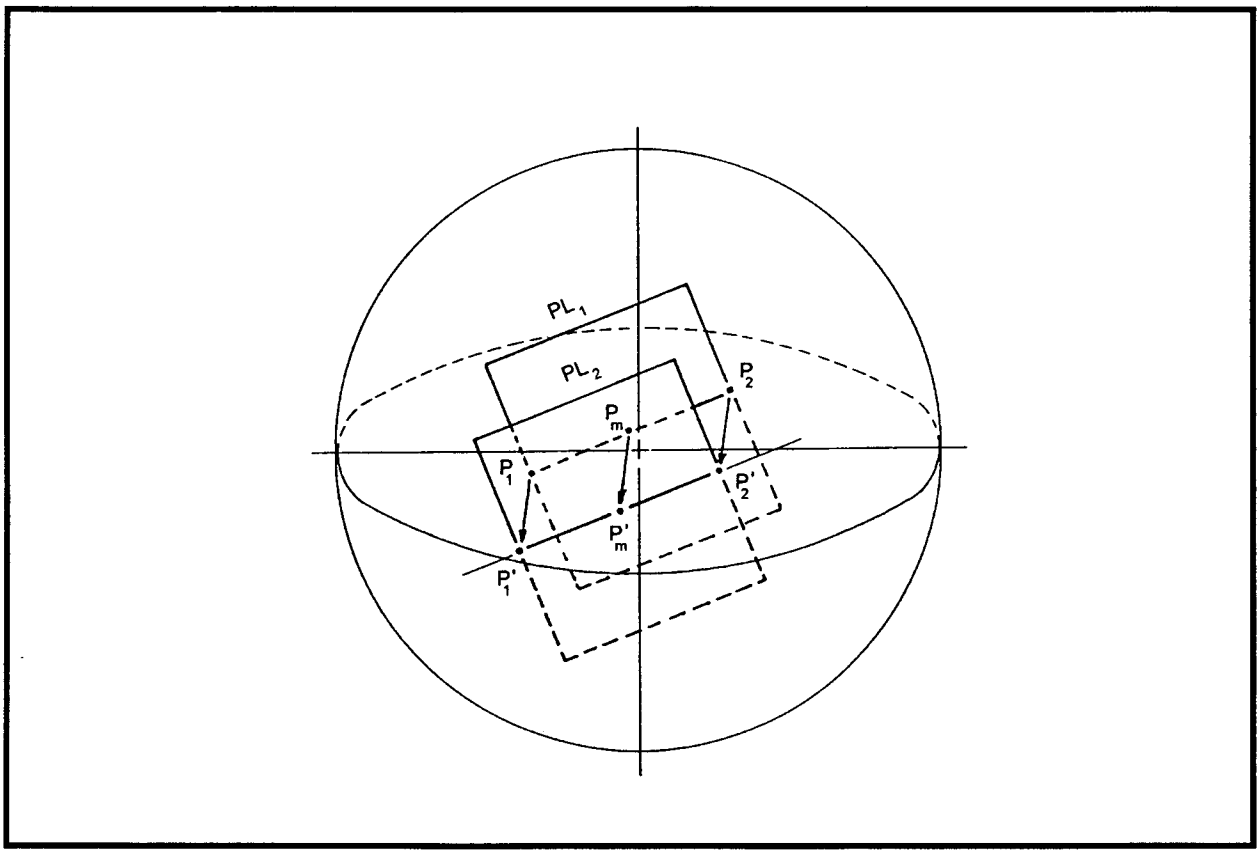

Figure 5. Baseline tangent (Tan) segment $\overline{P_1 P_2}$ in plane PL_1 projected seaward to form offshore tangent segment $\overline{P_1' P_2'}$ in plane PL_2.

Similarly, the geocentric coordinates of projected end point $P_2'(x_2', y_2', z_2')$ are obtained from the same set of equations by substituting (x_2, y_2, z_2) for (x_1, y_1, z_1).

The quartic equation (12) has two imaginary roots and two real roots, only one of which is the z coordinate of the seaward projection of point P_1 or P_2.

The equation of plane PL2 (fig. 5) that is parallel to plane PL1 and that contains the projected line segment $P_1' P_2'$ is

$$ex + fy + gz = h_2, \tag{25}$$

where

$$h_2 = \frac{\left| e(x_1' + x_2') + f(y_1' + y_2') + g(z_1' + z_2') \right|}{2}, \tag{26}$$

and the values of e, f, and g are the same as determined for plane PL1. The equations of the line of intersection with the earth's ellipsoidal surface of plane PL2 are

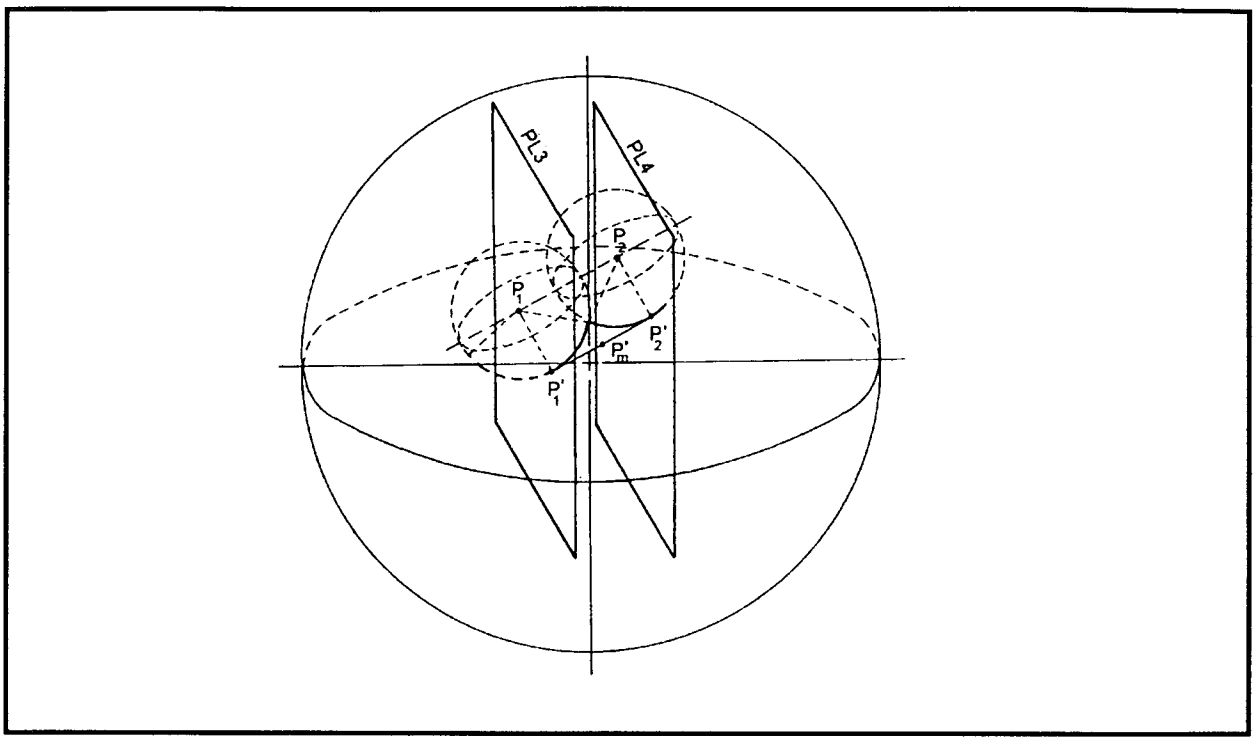

Figure 6. Baseline straight line segment end points P_1 and P_2 projected *nmc* nautical miles seaward to produce an offshore boundary straight line segment and points P_1' and P_2'.

$$z^2\left(g^2 + \frac{f^2a^2}{b^2}\right) - 2h_2gz + 2egxz - 2h_2ex + x^2\left(e^2 + f^2\right) + h_2^2 - a^2f^2 = 0, \qquad (27)$$

and

$$y = \frac{\left(h_2 - ex - gz\right)}{f}. \qquad (28)$$

From every baseline point, an offshore boundary arc segment is projected; and from every baseline straight line segment, an offshore boundary tan segment is projected (fig. 6). All of these projected arc and tan segments create a dense network of segments over the ellipsoidal surface in the vicinity of the offshore boundary line. The envelope line that envelops the most seaward of all of these segments is the *n*-nautical mile offshore boundary line.

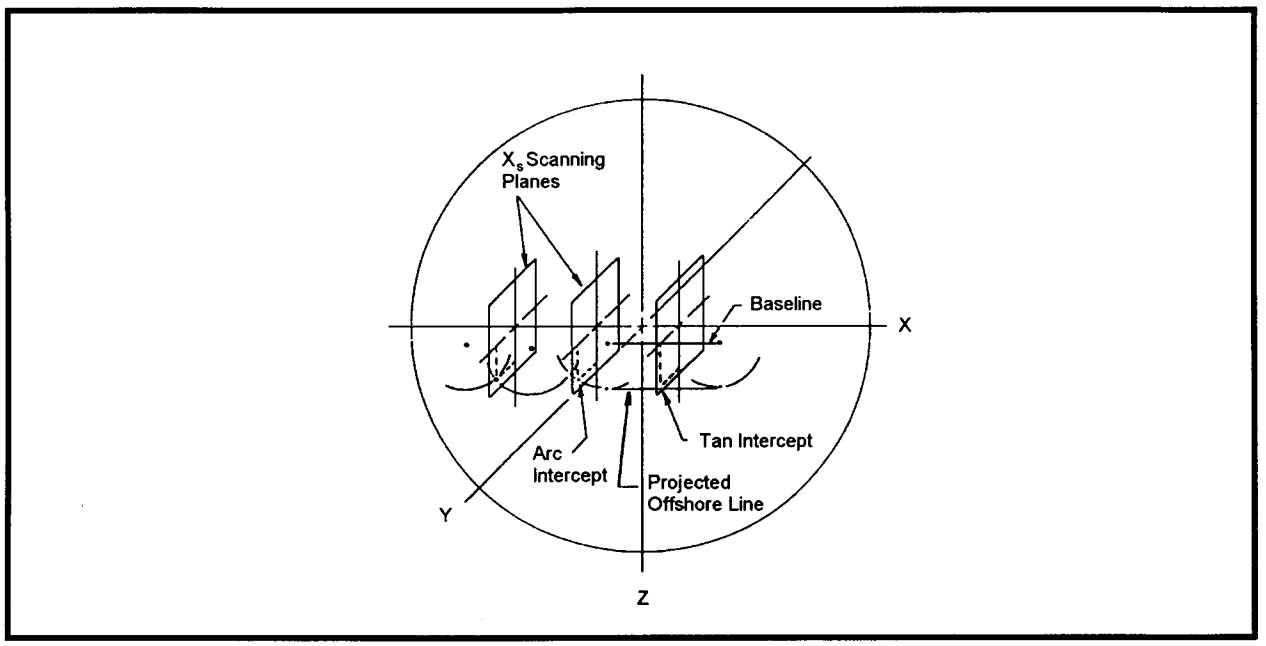

Figure 7. X_s scanning planes for detecting the most seaward projected curved line segments or straight line segments.

Identifying the Most Seaward Arc Segments and Tan Segments

In order to identify all of the most seaward segments in their proper sequence, the network is probed at very short intervals by scan lines each of which is projected in a seaward direction to intersect all of the arc segments and tan segments in its path. The set of coordinates of the point of intersection that is most seaward identifies the most seaward arc or tan segment in the path of each scan line. As the scanning process progresses along the baseline, the identity of the most seaward arc or tan segment detected in the path of each scan line is temporarily saved. Whenever a change in identity occurs, the identity of the old segment is permanently recorded. At the completion of the scanning process, there is a record in proper sequence of all of the most seaward arc and tan segments that intersect to form a continuous envelope line.

The Scanning Process

Each scan line is actually the line of intersection with the earth's ellipsoidal surface of a plane that, in the case of a more or less west to east coastline, is perpendicular to the geocentric X axis (fig. 7). In the case of a more or less south to north coastline, the scanning plane is perpendicular to the geocentric Z axis.

Coordinates of Arc Intercepts - In the case of a west-to-east coastline, the plane of the scan line

$$x = x_S \tag{29}$$

intersects all of the lines of intersection of all of the arc segments in its path. The geocentric coordinates of the point of intersection $P_S(x_S, y_S, z_S)$ of the plane of the scan line and the line of intersection of a particular arc segment centered at baseline point $P_O(x_O, y_O, z_O)$ are obtained from the set of equations

$$Jz_S^4 + Kz_S^3 + Lz_S^2 + Mz_S + N = 0, \tag{30}$$

$$y_S = Pz_S^2 + Qz_S + T, \tag{31}$$

and

$$x_S = x_S, \tag{32}$$

where

$$P = \frac{\left(1 - \frac{a^2}{b^2}\right)}{2y_0}, \tag{33}$$

$$Q = -\frac{z_0}{y_0}, \tag{34}$$

$$T = \frac{\left(x_0^2 + y_0^2 + z_0^2 - R_0^2 + a^2 - 2x_S x_0\right)}{2y_0}, \tag{35}$$

$$J = P^2, \tag{36}$$

$$K = 2PQ, \tag{37}$$

$$L = 2PT + Q^2 + \frac{a^2}{b^2}, \tag{38}$$

$$M = 2QT, \tag{39}$$

and

$$N = T^2 + x_S^2 - a^2. \tag{40}$$

Similarly, in the case of a south-to-north coastline, the plane of the scan line

$$z = z_S \tag{41}$$

intersects all of the lines of intersection of all of the arc segments in its path and the geocentric coordinates of the point of intersection of the plane of the scan line with the line of intersection of a particular arc segment are obtained from

$$Px_S^2 + Qx_S + S = 0, \tag{42}$$

$$y_S = U - Vx_S, \tag{43}$$

and

$$z_S = z_S, \tag{44}$$

where

$$U = \frac{\left(x_0^2 + y_0^2 + z_0^2 - R_0^2 + z_S^2\left(1 - \frac{a^2}{b^2} \right) + a^2 - 2z_S z_0 \right)}{2y_0}, \tag{45}$$

$$V = \frac{x_0}{y_0}, \tag{46}$$

$$P = 1 + V^2, \tag{47}$$

$$Q = -2UV, \tag{48}$$

and

$$S = U^2 + z_S^2 \frac{a^2}{b^2} - a^2. \tag{49}$$

Coordinates of Tan Intercepts - In the case of a west-to-east coastline, the plane of a scan line also intersects all of the lines of intersection of all of the tan segments in its path. (In the case of tan segments, the scan line must also pass between the end points P_1' and P_2' of the projected tan segment). The geocentric coordinates of the point of intersection of the plane of the scan line and the line of intersection of a particular tan segment are given by

$$Uz_S^2 + Vz_S + W = 0, \tag{50}$$

$$y_S = \frac{1 - ex_S - gz_S}{f}, \tag{51}$$

and

$$x_S = x_S, \tag{52}$$

where

$$U = g^2 + \frac{f^2a^2}{b^2}, \tag{53}$$

$$V = 2g\left(ex_S - 1\right), \tag{54}$$

and

$$W = x_S^2\left(e^2 + f^2\right) - 2ex_S - f^2a^2 + 1. \tag{55}$$

Similarly, in the case of a south-to-north coastline, the plane of a scan line intersects all of the lines of intersection of all of the tan segments in its path, and the geocentric coordinates of the point of intersection of the plane of the scan line and the line of intersection of a particular tan segment can be determined from

$$Ux_S^2 + Vx_S + W = 0, \tag{56}$$

$$y_S = \frac{1 - ex_S - gz_S}{f}, \tag{57}$$

and

$$z_S = z_S, \tag{58}$$

where

$$U = f^2 + e^2, \tag{59}$$

$$V = 2e\left(gz_S - 1\right), \tag{60}$$

and

$$W = z_S^2\left(g^2 + \frac{f^2a^2}{b^2}\right) - 2gz_S - f^2a^2 + 1. \tag{61}$$

As the coordinates of each point of intersection of each scan line with each arc segment and/or each tan segment in its path are computed, the identity of the most seaward point of intersection is saved. When all points of intersection have been computed, the identity of the most seaward of all segments in the path of each scan line will be known.

In order to be sure that no offshore segment is missed that should form part of the offshore boundary, a scan interval is selected that is less than the projected length of any arc or tan segment. Each arc segment and each tan segment will therefore be intersected by more than one scan line.

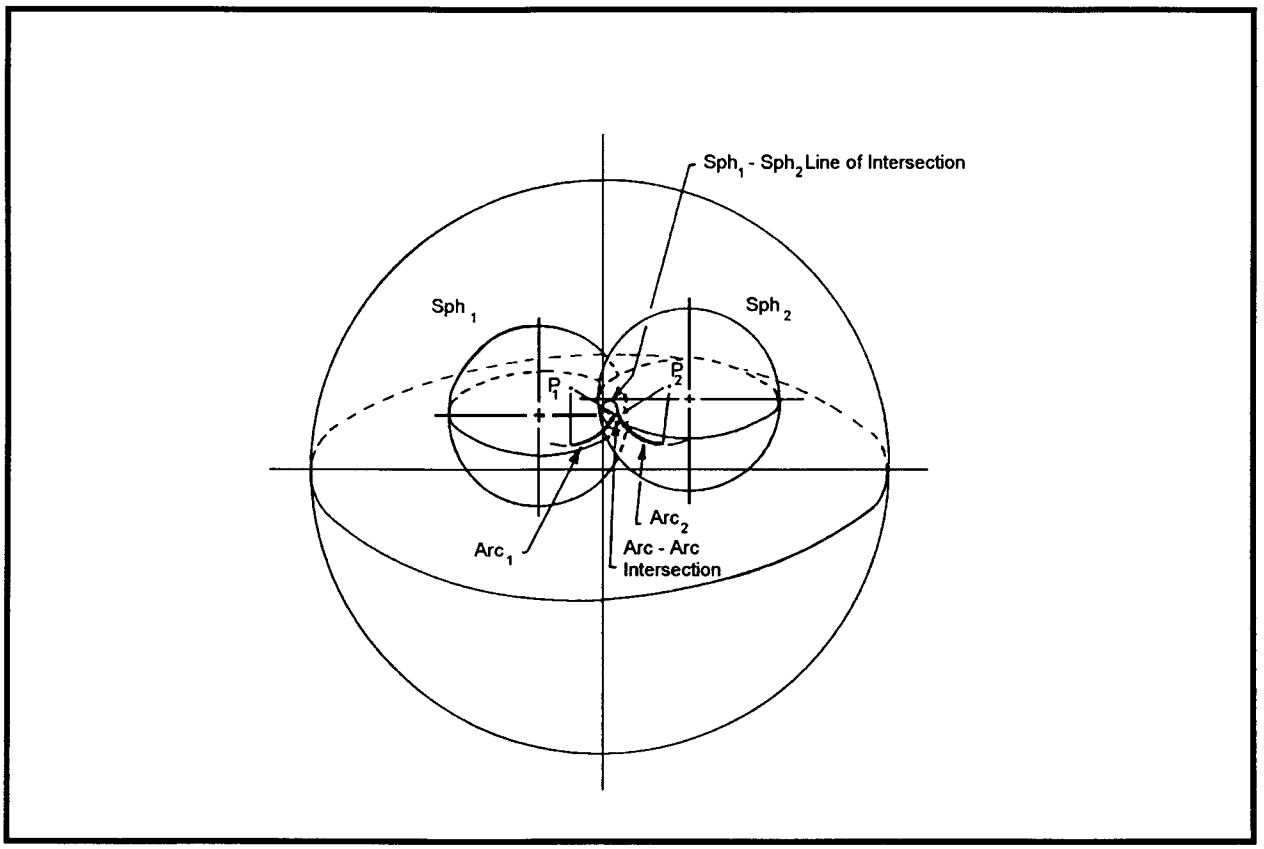

Figure 8. Sphere 1 - Sphere 2 - Ellipsoid point of intersection.

Points of Intersection of Adjacent Arc and Tan Segments

During the scanning process, the coordinates of the points of intersection of the two previous offshore envelope segments are computed whenever an arc or tan segment identity change occurs. This involves the computation of the points of intersection of two arc segments, two tan segments, or an arc segment and a tan segment.

Point of Intersection of Two Arc Segments - The geocentric coordinates of the point of intersection of two arc segments having baseline point centers of arc $P_1(x_1, y_1, z_1)$ and $P_2(x_2, y_2, z_2)$ (fig. 8) are obtained from the set of equations.

$$Jz^4 + Kz^3 + Lz^2 + Mz + N = 0, \tag{62}$$

$$y = Pz^2 + Qz + T, \tag{63}$$

and

$$x = \frac{1 - fy - gz}{e}, \tag{64}$$

where

$$e = \frac{(x_2 - x_1)}{h}, \tag{65}$$

$$f = \frac{(y_2 - y_1)}{h}, \tag{66}$$

$$g = \frac{(z_2 - z_1)}{h}, \tag{67}$$

and

$$h = \frac{\left[\left(x_2^2 + y_2^2 + z_2^2\right) - \left(x_1^2 + y_1^2 + z_1^2\right)\right]}{2}, \tag{68}$$

$$P = \frac{\left(1 - \frac{a^2}{b^2}\right)}{S}, \tag{69}$$

$$Q = \frac{2\left(\frac{x_1 g}{e} - z_1\right)}{S}, \tag{70}$$

$$S = 2\left(y_1 - \frac{x_1 f}{e}\right), \tag{71}$$

$$T = \frac{\left(x_1^2 + y_1^2 + z_1^2 - R_1^2 + a^2 - \frac{2x_1}{e}\right)}{S}, \tag{72}$$

$$J = P^2\left(f^2 + e^2\right), \tag{73}$$

$$K = 2P\left[Q\left(f^2 + e^2\right) + fg\right], \tag{74}$$

$$L = \left(f^2 + e^2\right)\left(Q^2 + 2PT\right) + g^2 + \frac{e^2 a^2}{b^2} + 2f(gQ - P), \tag{75}$$

$$M = 2\left[Q\left(T\left\{f^2 + e^2\right\} - f\right) + g(fT - 1)\right], \tag{76}$$

and

$$N = T\left[T\left(f^2 + e^2\right) - 2f\right] - a^2 e^2 + 1. \tag{77}$$

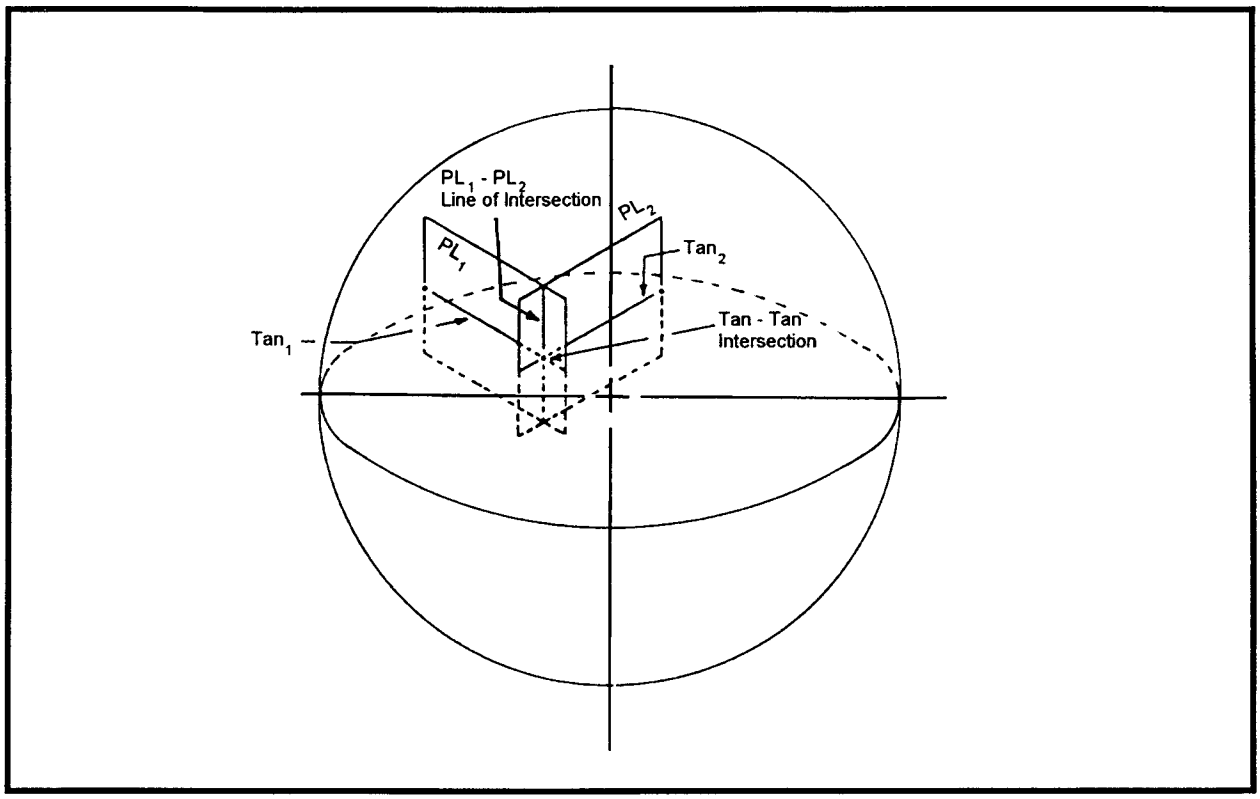

Figure 9. Plane 1 - Plane 2 - Ellipsoid point of intersection.

Point of Intersection of Two Tan Segments - The geocentric coordinates of the point of intersection of two tan segments that lie within the projected offshore planes (fig. 9)

$$ex + fy + gz = 1 \tag{78}$$

and

$$ux + vy + wz = 1 \tag{79}$$

can be obtained from the set of equations

$$Uz^2 + Vz + W = 0, \tag{80}$$

$$y = P + Qz, \tag{81}$$

and

$$x = S - Tz, \tag{82}$$

where

$$P = \frac{(e - u)}{(ev - uf)}, \tag{83}$$

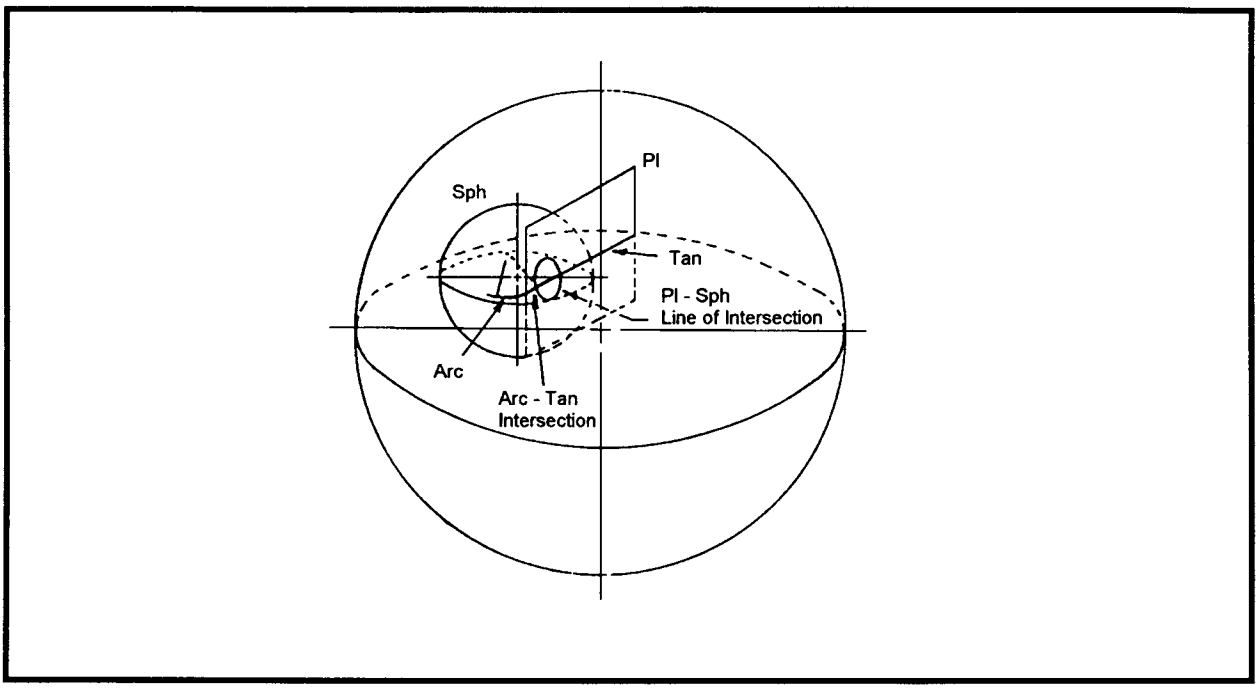

Figure 10. Plane - Sphere - Ellipsoid point of intersection.

$$Q = \frac{(ug - ew)}{(ev - uf)}, \tag{84}$$

$$S = \frac{(1 - fP)}{e}, \tag{85}$$

$$T = \frac{(fQ + g)}{e}, \tag{86}$$

$$U = Q^2 + T^2 + \frac{a^2}{b^2}, \tag{87}$$

$$V = 2(PQ - ST), \tag{88}$$

and

$$W = P^2 + S^2 - a^2. \tag{89}$$

Point of Intersection of an Arc Segment and a Tan Segment - The geocentric coordinates of the point of intersection of an arc segment having baseline point center of arc $P_1(x_1, y_1, z_1)$ and a tan segment that lies within the projected offshore plane (fig. 10).

$$ex + fy + gz = 1 \tag{90}$$

can be obtained from the set of equations

$$Jz^4 + Kz^3 + Lz^2 + Mz + N = 0, \tag{91}$$

$$y = Pz^2 + Qz + T, \tag{92}$$

and

$$x = \frac{1 - fy - gz}{e}, \tag{93}$$

where

$$P = \frac{1 - \dfrac{a^2}{b^2}}{S}, \tag{94}$$

$$Q = \frac{2\left(\dfrac{x_1 g}{e} - z_1\right)}{S}, \tag{95}$$

$$S = 2\left(y_1 - \frac{x_1 f}{e}\right), \tag{96}$$

$$T = \frac{x_1^2 + y_1^2 + z_1^2 - R_1^2 + a^2 - \dfrac{2x_1}{e}}{S}, \tag{97}$$

$$J = P^2\left(f^2 + e^2\right), \tag{98}$$

$$K = 2P\left[Q\left(f^2 + e^2\right) + fg\right], \tag{99}$$

$$L = \left(f^2 + e^2\right)\left(Q^2 + 2PT\right) + g^2 + \frac{e^2 a^2}{b^2} + 2f(gQ - P), \tag{100}$$

$$M = 2\left[Q\left(T\left\{f^2 + e^2\right\} - f\right) + g(fT - 1)\right], \tag{101}$$

and

$$N = T\left[T\left(f^2 + e^2\right) - 2f\right] - a^2e^2 + 1. \qquad (102)$$

The coordinates of all of the points of intersection are recorded in their proper sequence along with the types and identities of the intersecting segments.

At the completion of the scanning process for each baseline computational section, this record contains most of the information needed to produce a legal description of the offshore boundary line.

Offshore Boundary Line Defining Points and Associated Points - Boundary line defining points are points on a boundary line, the coordinates of which are needed to accurately define the location of the boundary line. Defining points include boundary line beginning and ending points, points of intersection of adjoining arc segments and/or tan segments, points needed to trace the locations of arc segments and/or tan segments, and points of intersection of the boundary line with OCS block grid lines (fig. 11).

Boundary line associated points are points on the baseline or non-defining points on the boundary line, the coordinates of which are needed for computations associated with the determination of the coordinates of boundary line defining points or for computations needed to relate the location of the offshore boundary line to the locations of other boundary lines, shipping safety fairways and anchorage areas, points on the coastline, etc.

Legal Description of an Offshore Boundary Line

The offshore boundary line, which is a single, continuous, unbroken line, is described by a sequence of points of intersection, having known geographic coordinates, which are connected by identified arc segments and/or tan segments (fig. 12) The terminology used to describe the boundary has been standardized. The phrase "BEGINNING AT" is used to describe the beginning point of the line. Thereafter when the boundary follows the path of an arc segment, it is described by the phrase "BY ARC CENTERED AT" and is identified by its baseline center of arc. The point of intersection with the next boundary segment is indicated by the word "TO". When the boundary line follows the path of a tan segment, this is indicated by the phrase "BY STRAIGHT LINE TO," and the point of intersection with the next segment in sequence is defined.

The location of each point of intersection is defined by geographic coordinates. The location of each baseline center of arc is also defined by geographic coordinates. A constant arc radius of curvature and projection distance equal to the specified length of arc over the ellipsoidal surface are implied for each section of coastline.

CENTRAL ATLANTIC LAT 35 TO LAT 42

DESCRIPTION OF BASELINE W

SEQ		LATITUDE	LONGITUDE	POINT
1	A LINE FROM	352147.700	752946.600	550039
2	THROUGH	352318.400	752919.200	550040
3	THROUGH	352412.100	752906.100	550041
4	THROUGH	352453.700	752903.000	550042
5	THROUGH	352625.600	752856.200	550043
6	THROUGH	352824.800	752847.400	550044
7	THROUGH	352930.500	752836.100	550045
8	THROUGH	353114.600	752817.300	550046
9	THROUGH	353222.100	752756.200	550047
10	THROUGH	353435.800	752734.600	550048
11	THROUGH	353516.400	752735.400	040001
12	TO	353654.000	752753.200	040002
13	A LINE FROM	353654.000	752753.200	040092
14	THROUGH	353839.100	752816.100	040003
15	TO	354010.800	752834.900	040004
16	A LINE FROM	354010.800	752834.900	040094
17	TO	354057.900	752845.100	040005
18	A LINE FROM	354057.900	752845.100	040095
19	THROUGH	354323.000	752934.300	040006
20	THROUGH	354425.400	753003.100	040007
21	THROUGH	354557.500	753059.200	040008
22	THROUGH	354607.500	753115.800	040009
23	THROUGH	354702.600	753154.300	040010
24	THROUGH	354723.900	753153.900	040011
25	TO	354753.800	753211.400	040012
26	A LINE FROM	354854.900	753255.300	040013
27	THROUGH	355133.200	753402.500	040014
28	THROUGH	355228.400	753431.700	040015
29	THROUGH	355433.600	753541.700	040016
30	THROUGH	355645.800	753656.100	040017
31	THROUGH	360107.400	753926.100	040018
32	TO	360153.100	753952.900	040019
33	A POINT AT	360246.200	754023.200	040020
34	A POINT AT	375203.600	752336.900	110001
35	A POINT AT	375149.200	752306.200	110002
36	A LINE FROM	375150.200	752133.700	110007
37	THROUGH	375217.700	752108.900	110008
38	THROUGH	375255.200	752039.000	110009

Figure 11. Legal description of baseline.

CENTRAL ATLANTIC LAT 35 TO LAT 42

DESCRIPTION OF OFFSHORE LINE

SEQ		LATITUDE	LONGITUDE	POINT
1	BEGINNING AT	345960.000	712649.669	550041
2	BY ARC CENTERED AT	352412.100	752906.100	550041
	TO	350101.326	712639.257	550041
3	BY ARC CENTERED AT	353222.100	752756.200	550047
	TO	350206.796	712625.219	550047
4	BY STRAIGHT LINE TO	350419.680	712557.167	550047
5	BY ARC CENTERED AT	353435.800	752734.600	550048
	TO	353339.822	712224.598	550048
6	BY STRAIGHT LINE TO	353420.414	712223.336	550048
7	BY ARC CENTERED AT	353516.400	752735.400	040001
	TO	360040.335	712341.828	040001
8	BY STRAIGHT LINE TO	360217.452	712354.588	040001
9	BY ARC CENTERED AT	353654.000	752753.200	040092
	TO	360753.648	712444.701	040092
10	BY STRAIGHT LINE TO	360837.923	712452.091	040092
11	BY STRAIGHT LINE TO	360907.664	712456.670	040003
12	BY ARC CENTERED AT	354010.800	752834.900	040094
	TO	361056.514	712514.049	040094
13	BY STRAIGHT LINE TO	361142.742	712521.699	040094
14	BY ARC CENTERED AT	354057.900	752845.100	040095
	TO	363023.896	712935.341	040095
15	BY STRAIGHT LINE TO	363158.059	713002.507	040095
16	BY ARC CENTERED AT	380505.200	751200.500	110017
	TO	363838.433	712541.154	110017
17	BY STRAIGHT LINE TO	363958.702	712451.022	110017
18	BY ARC CENTERED AT	380627.000	751113.500	110018
	TO	365524.515	711610.313	110018
19	BY STRAIGHT LINE TO	365604.979	711549.986	110018
20	BY ARC CENTERED AT	380708.100	751055.000	110019
	TO	365909.794	711419.268	110019
21	BY ARC CENTERED AT	381925.000	750505.100	110029
	TO	371706.254	710514.168	110029
22	BY ARC CENTERED AT	392548.000	742003.200	160104
	TO	373522.556	704728.651	160104

Figure 12. Legal description of a projected offshore boundary line.

The complete description of an offshore boundary line along an extended stretch of coastline consists of descriptions of multiple sections of coastline that have been computed independently. The complete description is obtained by combining the separate descriptions and eliminating duplicate portions in overlapping areas. (Each section should overlap adjacent sections to prevent the possibility of gaps between adjacent sections.)

Locating an Offshore Boundary Line Within The OCS Block Grid System

For minerals management purposes, the OCS has been subdivided into a planar network of square or rectangular blocks bounded by grid lines uniformly spaced in both X and Y directions. The grid system adopted for use on the OCS, when adjacent to areas previously leased by coastal States, is frequently the state plane coordinate system of the State. In most other cases, the Universal Transverse Mercator (UTM) coordinate system has been adopted (fig. 13).

The location of an offshore boundary line is determined without considering the OCS block grid system. However, the two must be compatible if they are to be related. A common grid scale factor and plane coordinate system are necessary.

If there is compatibility, the location of the offshore boundary line on the grid can be determined by computing the coordinates of the points of intersection of the offshore boundary line with the OCS block grid lines and by determining the grid coordinates of other needed boundary line defining points and associated points. Because the offshore boundary line is defined geodetically, an equation in terms of grid coordinates must be derived to represent the boundary line in the plane coordinate system.

A polynomial equation is usually used for this purpose and can be derived in the following manner. The geographic coordinates of a relatively large number of points spaced at regular intervals along the boundary line are computed during the scanning process. These coordinates are transformed into the plane coordinate system of the appropriate area. Employing curve fitting procedures, a polynomial equation is derived that will closely approximate the offshore boundary line on the grid. In all subsequent cartographic computations, the boundary line is represented by the polynomial.

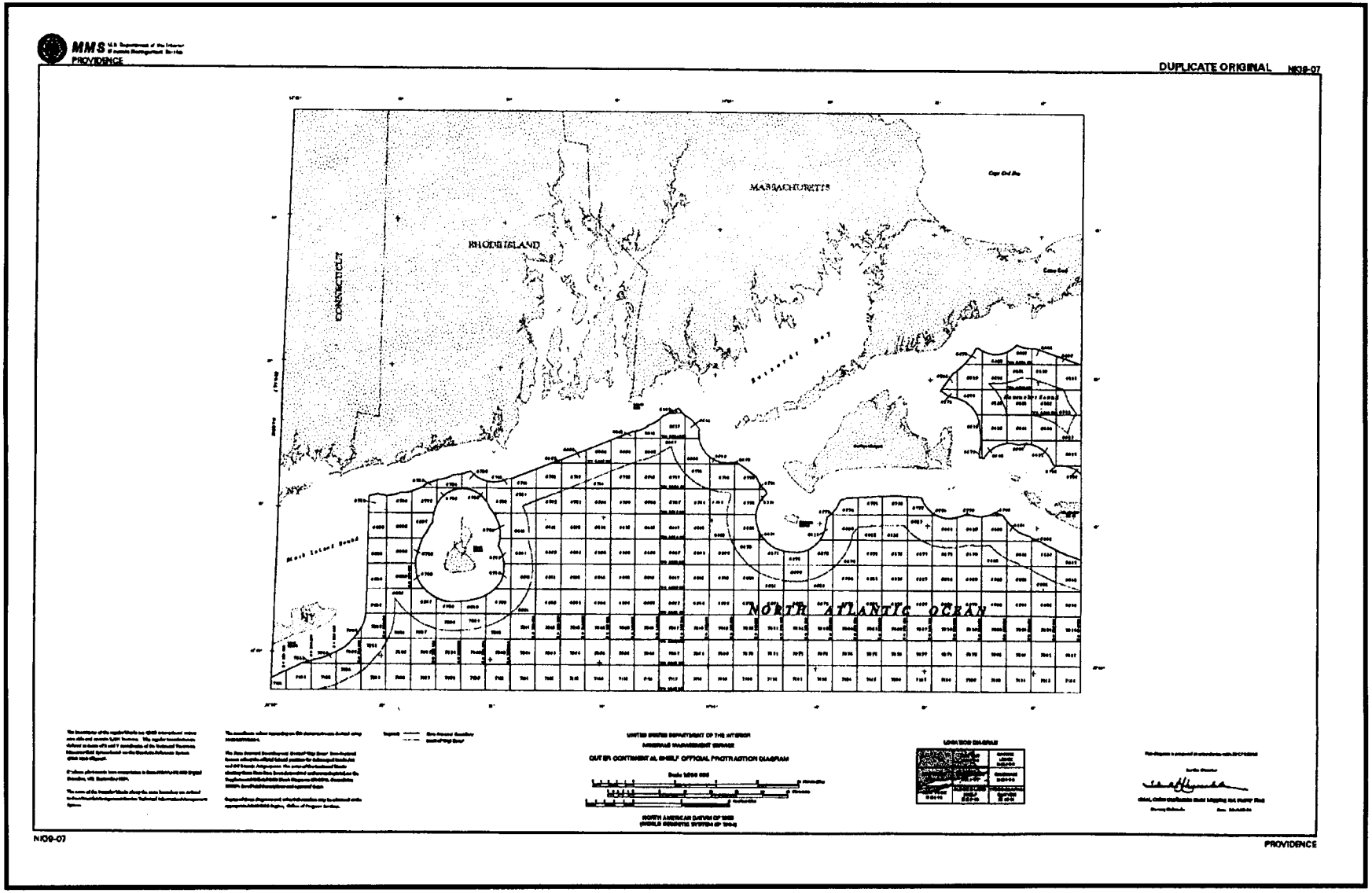

Figure 13. Offshore boundary line within an Outer Continental Shelf (OCS) block grid system.

Summary

Three-dimensional geodetic computational techniques and mathematical equations are described that have been developed for computing the locations of and for preparing complete and accurate descriptions of the projected offshore boundaries of the United States for minerals leasing purposes.

For offshore boundary projection purposes, the coastline is represented by a baseline that is defined by a combination of meander traverses and by prominently located salient points.

A three-dimensional geodetic projected boundary line consists of a series of intersecting curved line segments and/or straight line segments every point of which is a given distance from the baseline as measured along an arc over the earth's ellipsoidal surface.

A multistage process is utilized for computing the locations of the offshore boundaries. Descriptions and illustrations of the computational processes and the mathematical equations utilized in each stage have been presented.

References

Ball, W. E., 1971, Offshore Computations, Proceedings of the 1971 ACSM Annual Convention.

— 1980, Geometric Median Line Computations, Proceedings of the 1980 ACSM Fall Convention.

— 1993, Planar Median (Equidistant) Line Computations for Narrow Channels, Proceedings of the 1993 ACSM Annual Convention.

— 1997a, Three-Dimensional Coastline Projection Techniques for Determining The Locations of Offshore Boundaries. Proceedings of the 1997 ACSM Annual Convention.

— 1997b, Three-Dimensional Equidistant Line Computations for Determining The Locations of Offshore Boundaries. Proceedings of the 1997 ACSM Annual Convention.

Notation

a = length of ellipsoidal semi-major axis

b = length of ellipsoidal semi-minor axis

R_θ = average radius of ellipsoidal arc with azimuth θ

The Department of the Interior Mission

As the Nation's principal conservation agency, the Department of the Interior has responsibility for most of our nationally owned public lands and natural resources. This includes fostering sound use of our land and water resources; protecting our fish, wildlife, and biological diversity; preserving the environmental and cultural values of our national parks and historical places; and providing for the enjoyment of life through outdoor recreation. The Department assesses our energy and mineral resources and works to ensure that their development is in the best interests of all our people by encouraging stewardship and citizen participation in their care. The Department also has a major responsibility for American Indian reservation communities and for people who live in island territories under U.S. administration.

The Minerals Management Service Mission

As a bureau of the Department of the Interior, the Minerals Management Service's (MMS) primary responsibilities are to manage the mineral resources located on the Nation's Outer Continental Shelf (OCS), collect revenue from the Federal OCS and onshore Federal and Indian lands, and distribute those revenues.

Moreover, in working to meet its responsibilities, the **Offshore Minerals Management Program** administers the OCS competitive leasing program and oversees the safe and environmentally sound exploration and production of our Nation's offshore natural gas, oil and other mineral resources. The MMS **Royalty Management Program** meets its responsibilities by ensuring the efficient, timely and accurate collection and disbursement of revenue from mineral leasing and production due to Indian tribes and allottees, States and the U.S. Treasury.

The MMS strives to fulfill its responsibilities through the general guiding principles of: (1) being responsive to the public's concerns and interests by maintaining a dialogue with all potentially affected parties and (2) carrying out its programs with an emphasis on working to enhance the quality of life for all Americans by lending MMS assistance and expertise to economic development and environmental protection.